SPEAKER MODEL :L100W30RL

DESCRIPTION SPEAKER

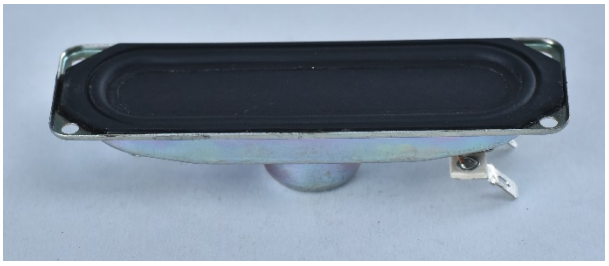

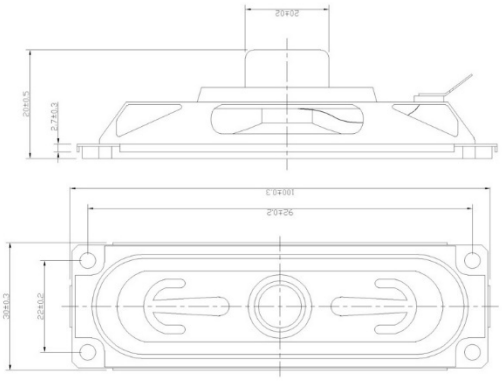

SPEAKER SPECIFICATION

Outer Dimensions	100*30 mm(See attached drawing)
Rated (Max.)Input	10 W (12W)
Voice Coil Imp.	8 ± 1.2 Ω (1000 Hz 1 V)
Lowest Resonance Frequency (fo)	300 ± 60 Hz (1 V)
Sound Pressure Level	76 ± 2 dB (0.1 w 0.5 m) at(0.6)(0.8)(1.0(1.2)KHZ
Frequency Response Deviation	FO Hz ~ 20 KHz max -10 dB
Operating temperature	-20 +50 ± 2 ℃ Hours 2 0 ~ 5 0 % R.H.
Load test	White noise at 10W 48 hours
Weight	40g

Other non-stipulated matters are based on CNS4784 4785 4786 based on JIS.C. 5530 5531
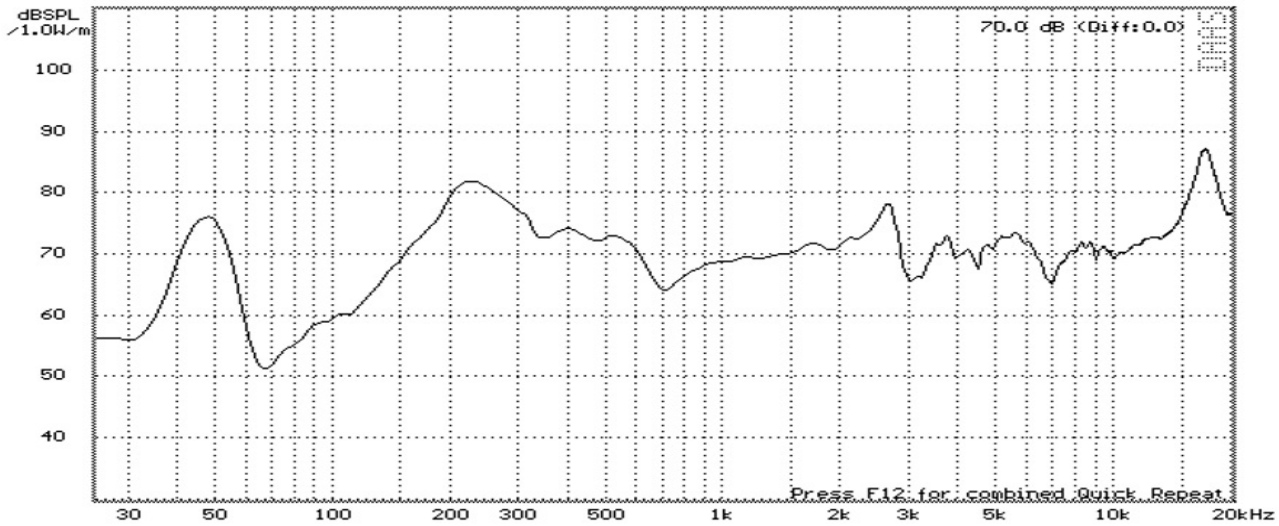
FREQUENCY RESPONSE CURVE(7*18)