Micro SPEAKER MODEL :28110-BOXS(32W68)-AS

DESCRIPTION SPEAKER

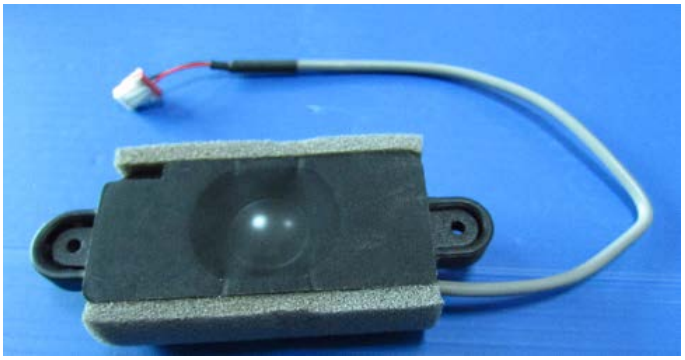

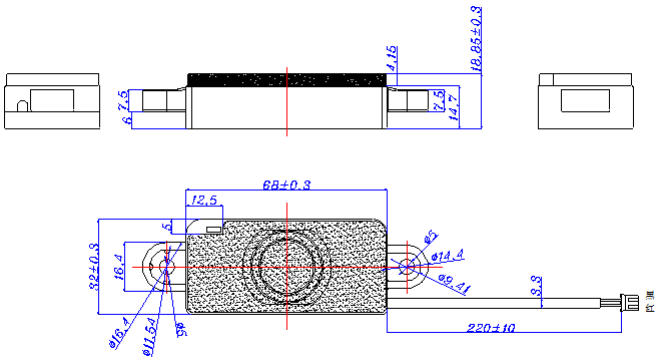

SPEAKER SPECIFICATION

Outer Dimensions	32*68 mm(See attached drawing)
Rated (Max.)Input	2.0 W (3.0W)
Voice Coil Imp.	4 ± 0.6 Ω (1000 Hz 1 V)
Lowest Resonance Frequency (fo)	530 ± 106 Hz (1 V)
Sound Pressure Level	92 ± 2 dB (0.1 w 0.1 m) at(1.0)(1.2)(1.5)(2.0)KHZ
Frequency Response Deviation	FO Hz ~ 20 KHz max -10 dB
Operating temperature	-20 +50 ± 2 ℃ Hours 2 0 ~ 5 0 % R.H.
Load test	White noise at 3.0 W 48 hours
Weight	34.9 g

Other non-stipulated matters are based on CNS4784 4785 4786 based on JIS.C. 5530 5531
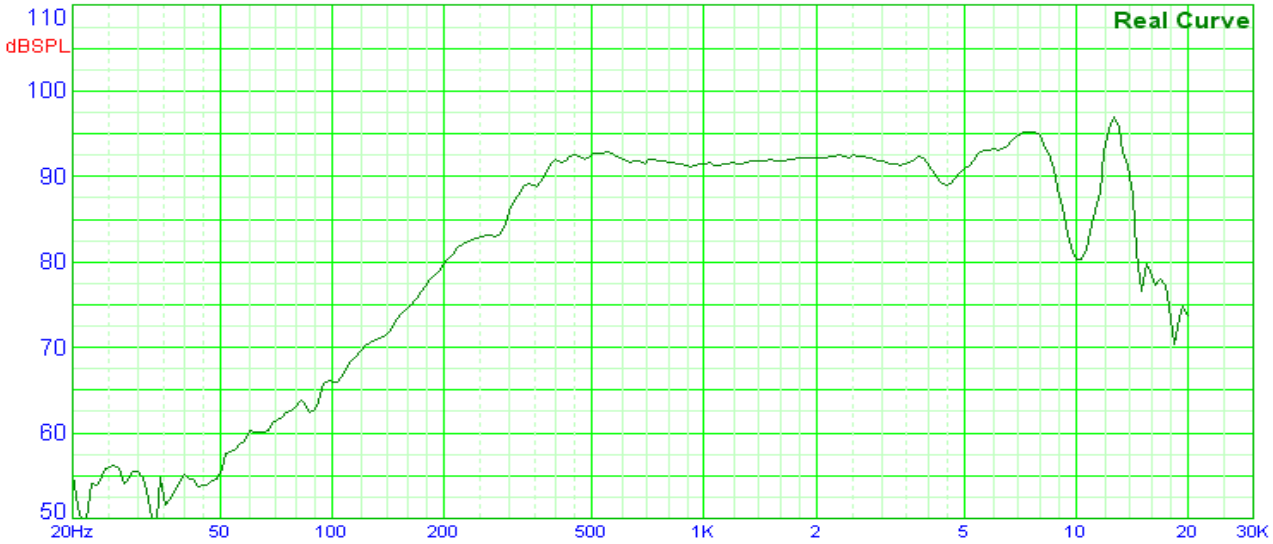
FREQUENCY RESPONSE CURVE(7*18)