Micro SPEAKER MODEL : 2027L-AS

DESCRIPTION SPEAKER

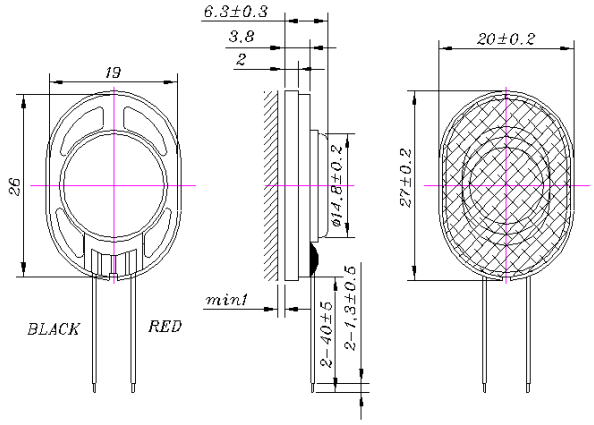

SPEAKER SPECIFICATION

Outer Dimensions	20*27 mm(See attached drawing)
Rated (Max.)Input	1.0 W (2.0W)
Voice Coil Imp.	8 ± 1.2 Ω (1000 Hz 1 V)
Lowest Resonance Frequency (fo)	800 ± 160 Hz (1 V)
Sound Pressure Level	88 ± 2 dB (1 w 0.1 m) at(1.0)(1.2)(1.5)(2.0)KHZ
Frequency Response Deviation	FO Hz ~ 20 KHz max -10 dB
Operating temperature	-20 +55 ± 2 ℃ Hours 2 0 ~ 5 0 % R.H.
Load test	White noise at 1.0W 48 hours
Weight	4.7g

Other non-stipulated matters are based on CNS4784 4785 4786 based on JIS.C. 5530 5531
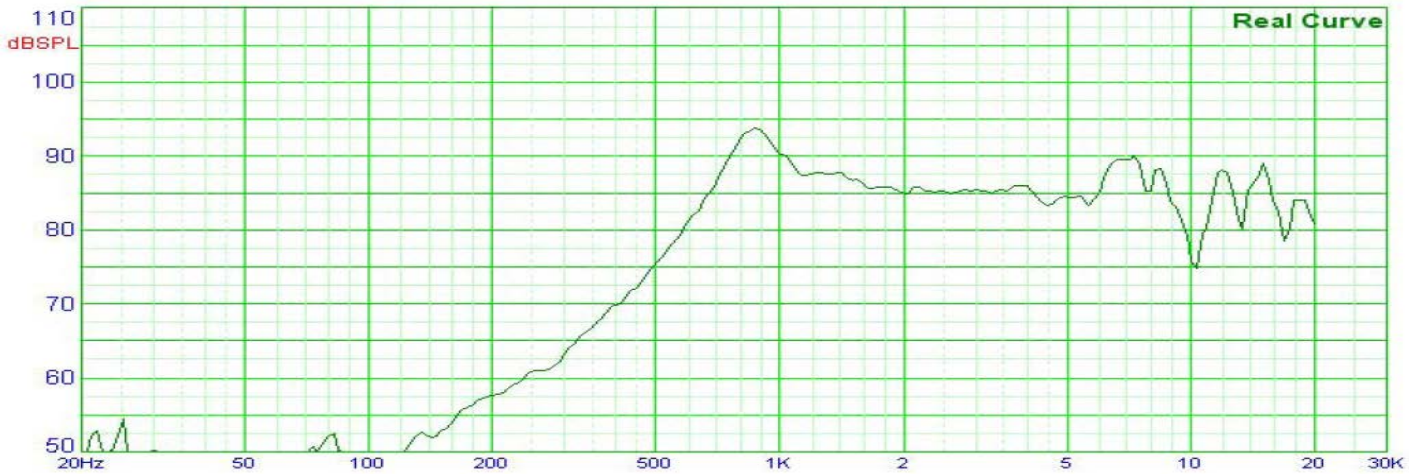
FREQUENCY RESPONSE CURVE